Bard | E-6036

60" x 36" drop-in bath

Features

- Integral overflow allows for deep soaking and easy installation
- Integral lumbar support
- Low step-over height for easy entry
- Textured bottom surface



Technical Specifications

Size	60"X36"X19-1/2"
Drain Location	Reversible

Warranty

See website for detailed warranty information.

Codes/Standards

cUPC

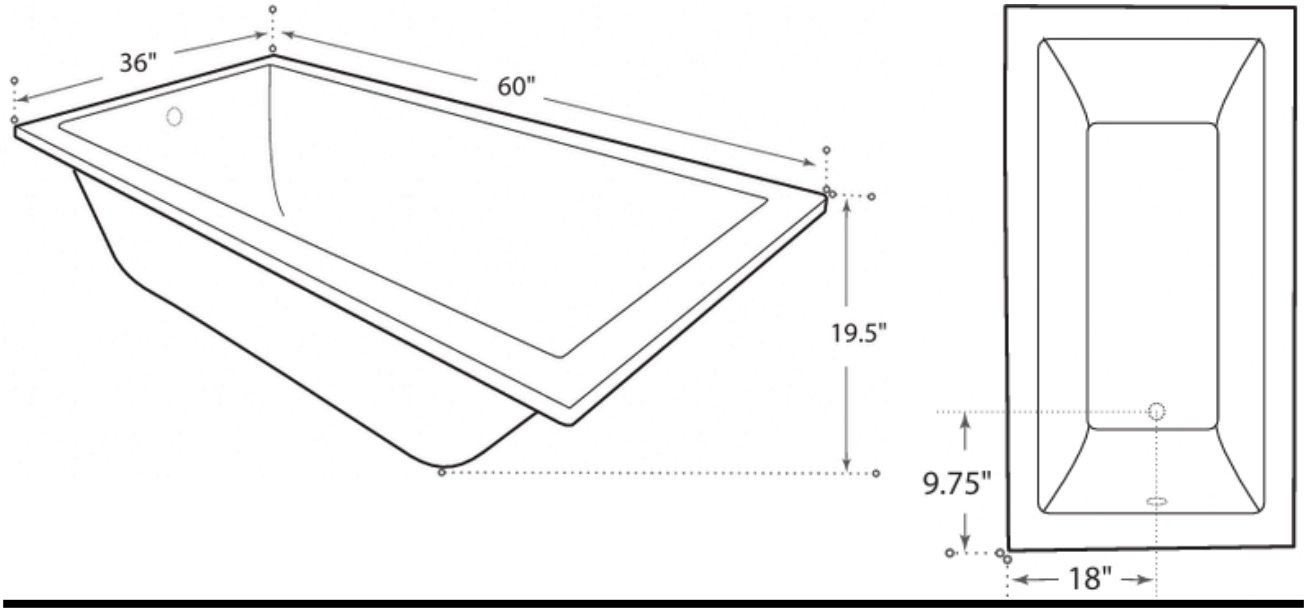

Ekko Bath reserves the right to make revisions without notice to product specifications.